The First Experience of the Upper Extremities Passive Exoskeletons using to Facilitate the Endosurgeons' Work

Vorobyev A.A.[1], Mashlykin A.A.[2], Andryushchenko F.A.[3], Omar Masud Shah-Mahmud[4], Bezborodov S.A.[5]

1. Department of Operative Surgery and Topographic Anatomy of the Volgograd State Medical University, the Head of the Habilitation and Rehabilitation Laboratory of the Volgograd Medical Scientific Center, Russia.
2. Department of Operative Surgery and Topographic Anatomy, Volgograd State Medical University, Russia.
3. Medical Sciences, Senior Researcher of the Laboratory of Habilitation and Rehabilitation, Volgograd Medical Scientific Center, Russia.
4. Department of Operative Surgery and Topographic Anatomy, Volgograd State Medical University, Russia.
5. Technical Sciences, Associate Professor, the Head of the Department of Biotechnical Systems and Technologies, Volgograd State Medical University, Russia.

Abstract

The introduction of endosurgery into medical practice has significantly reduced the severity of surgery for patients, and increased it significantly for endosurgeons. Until now, passive exoskeletons of the upper extremities have not been used to facilitate the work of medical workers.

The publication summarizes the first experience of using the endosurgeon's exoskeleton - REX-S. It was found that for the optimal work of endosurgeons, unloading of the arms and back is required, which can be done by using the developed original exoskeleton of the upper extremities.

The first experience of using the passive exoskeleton of the endosurgeon REX-S is completely positive and indicates the prospects of its wider application.

Clinical article (J Int Dent Med Res 2020; 13(4): 1643-1650)

Keywords: Exoskeleton of upper extremities, endosurgery, prevention of occupational hazards.

Received date: 19 September 2020 **Accept date:** 26 October 2020

Introduction

The introduction of endosurgery into medical practice has significantly reduced the severity of surgery for patients, and increased it significantly for endosurgeons. This is due to a significant increase in the duration of surgical interventions and a prolonged stay in a forced position, a decrease in muscle tone and the creation of prerequisites for diseases of the musculoskeletal system. It was revealed that the main occupational hazards in endosurgery are neuro-emotional stress, static load on large muscle groups due to prolonged forced position of the body[1].

All these factors are synergists, aggravating occupational hazard and leading to disability just at the time when the surgeon reaches the pinnacle of his professional skill. Therefore, in Russia, surgeons belong to the category of people with preferential pension benefits

The study of occupational diseases among endosurgeons at the Texas University showed that 90% of them have problems with the musculoskeletal system, manifested in pain, stiffness and the feeling of heaviness in the back, and 28% of them were forced to seek specialized treatment, which ended in every sixth surgical operation. The authors suggest the use of rubber mats under the legs and taping of the long back muscles for the musculoskeletal system diseases prevention[2].

Currently, exoskeletons are successfully used for military and industrial needs, facilitating the work of military personnel, personnel of nuclear power plants when operating special equipment, relieving static stress when working on conveyors. In medicine, passive exoskeletons are used for the habilitation and rehabilitation of patients with upper flaccid paraparesis and for the treatment of the lower jaw fractures[3,4,5].

Until now, passive exoskeletons of the upper extremities have not been used to facilitate the medical employees work. We have developed a classification and substantiated the requirements for the exoskeleton of an endosurgeon, which provide such a possibility[6,7].

***Corresponding author:**
Vorobyev A.A.
Professor, the Head of the Department of Operative Surgery and Topographic Anatomy of the Volgograd State Medical University, the Head of the Habilitation and Rehabilitation Laboratory of the Volgograd Medical Scientific Center, Russia.
E-mail: mihai-m@yandex.ru

In our opinion, the use of the endosurgeon exoskeleton developed and patented by us[8] will significantly alleviate the severity of endosurgical interventions, increase the endosurgeons labor productivity and preserve their professional significance for a longer time.

Materials and methods

The initial material for the study was the endosurgeon and his assistant's anatomical and biomechanical analysis of the movements and postures at the time of performing surgical interventions using photo and video recording methods.

Point name	Anatomical landmark
T 1	Processus spinosus vertebra prominens (CVII)
T 2	Angulus akromii
T 3	Tuberculum majus os humerus
T 4	Epicondylus lateralis
T 5	Olecranon
T 6	Processus stiloideus radii
T 7	Epicondylus medialis

Table 1. Points of exoskeleton anatomical attachment at the endosurgeon.

The stages of the endosurgeon's exoskeleton preparation for use were:

-Computer simulation (KOMPAS program).

-Manufacture of anatomically independent parts of the exoskeleton from magnesium-aluminum alloy on a CNC machine.

-Manufacture of a personalized customisable carrier jacket. Polymer bandages were used for the jacket frame manufacture, they were trimmed with breathable fabric on both sides and supplied with adjustment elements.

-Anthropometry of the endosurgeon. It was carried out according to generally accepted methods for skeletotopic points (Table 1). After the identification of the indicated points, anatomical parameterization was performed by determining the linear anatomical dimensions necessary for further design calculations. 8 parameters were proposed (Table 2).

-Assembling the exoskeleton and placing it on the supporting jacket.

-Selection of anti-gravity elastic rods. Elastic rubber rings were used as the latter, the size and number of which were determined individually, depending on the initial muscle strength and the weight of the arm.

Name of anatomical parameter	Method of the anatomical parameter determining
a 1	Distance between T 1 - T 2 (cm)
a 2	Distance between T 3 - T 4 (cm)
a 3	Distance between T 5 -T 6 (cm)
a 4	Distance between T 2 - T 3 (cm)
a 5	The height of the perpendicular built from the line middle between T4 - T7 to T5 when flexing at the elbow joint at an angle of 90°.
a 6	The circumference of the forearm when it is determined through the points T4 - T7.
a 7	Horizontal plane drawn through T1
a 8	Sagittal plane through the mid-clavicular line

Table 2. Anatomical parameters for calculating the endosurgeon's exoskeleton.

The exoskeleton tests for wear resistance included repetition of movements' cycles with a load on a specially made stand.

The comparative endosurgeon's endurance was assessed on 16 participants of the project, 13 men, 3 women aged 23 to 62 years with different indicators of physical endurance with and without the exoskeleton. For this, the test subjects took postures characteristic for an endosurgeon and noted the appearance of subjective sensations in the form of pain, paresthesias, inability to hold a given position, tremors of the extremities, etc.

A special questionnaire was used for carrying out endosurgical surgical interventions in the exoskeleton and assessing subjective sensations.

Statistical calculation was carried out in the program statistica 6.0.

Results

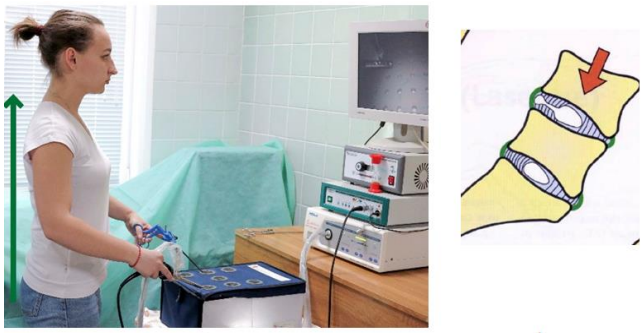

a b

Figure 1 a, b. Orthotopic endosurgeon's position in the sagittal plane. (This position is physiological, but in most cases, it is not used by endosurgeons).

Clinical and anatomical analysis of posture revealed the most common positions of the endosurgeon at the operating table, presented by us in the sagittal and frontal planes

(Fig. 1-7).

a b

Figure 2 a, b. Forced endosurgeon's position in the sagittal plane - with an inclination forward.
(The endosurgeon's hands, which do not have support, transfer excessive static load to the lumbar and thoracic spine. Such an articular disorder creates the prerequisites for the occurrence of spine arthrosis over a large extent).

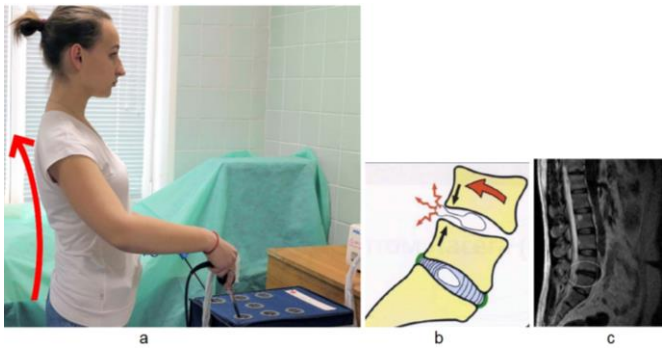

a b c

Figure 3 a, b, c Forced endosurgeon's position in the sagittal plane - with hyperextension of the spine.
(This position often arises as the result of the change in the previous position, as compensating for the excessive load on certain muscle groups. The intervertebral disc undergoes uneven compression in the posterior region, creating prerequisites for intervertebral hernias and disc entrapment).

The first three positions related to the sagittal plane are used by the endosurgeon with a relatively symmetrical position of the arms and an even distribution of the load on both extremities, which is far from always possible (Fig. 4), forcing the endosurgeon to take an unphysiological and uncomfortable position for himself, but allowing to implement the necessary endosurgical manipulations in full.

Figure 4. Forced endosurgeon's position with the arms asymmetric position and the load redistribution on one leg. The operation is performed in the exoskeleton.

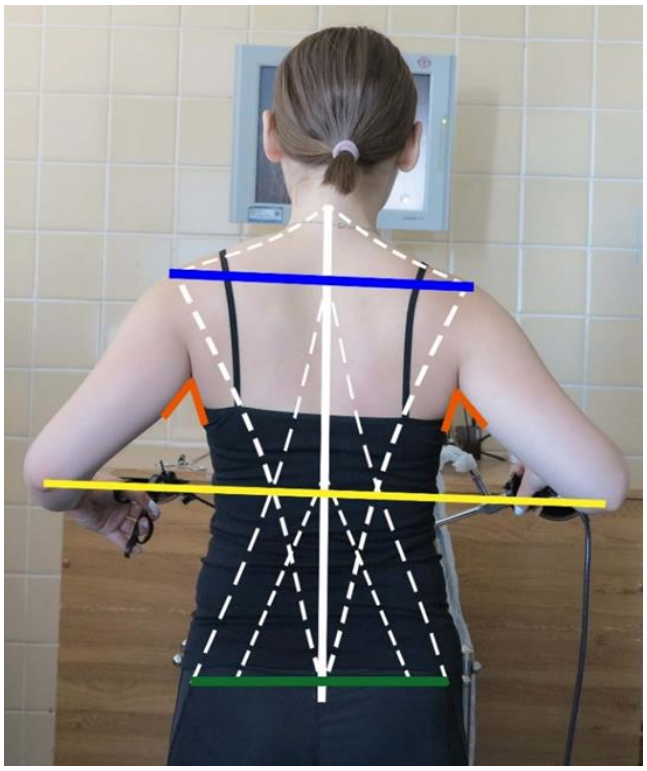

Figure 5 Orthotopic endosurgeon's position in the frontal plane.
(This position provides the same support on both legs, a straight back, with a horizontal position of the shoulder girdle lines. The intervertebral disc is subjected to axial compression with a uniform

nucleus pulposus pressure distribution to the disc edges).

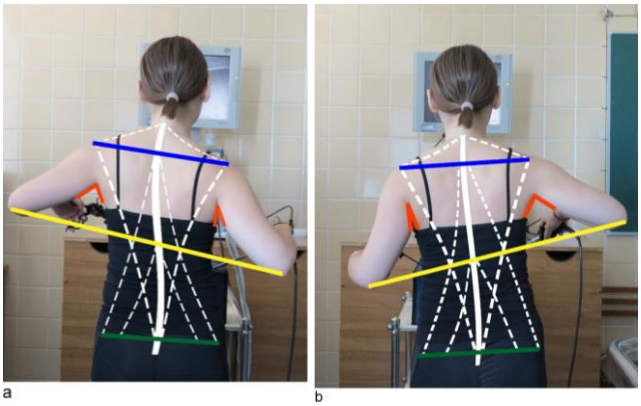

Figure 6 a, b. Forced endosurgeon's position with inclinations in the frontal plane.
(This endosurgeon's position provides the support transfer to one leg. The intervertebral disc is subjected to axial and angular compression with an uneven nucleus pulposus pressure distribution to the disc edges).

To facilitate the endosurgeon's work, we have proposed, patented, designed, manufactured and tested the endosurgeon's exoskeleton.

A schematic description of the endosurgeon's exoskeleton is shown in Figure 7.

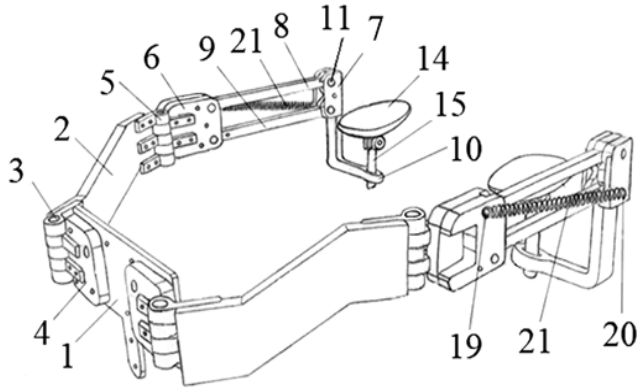

a

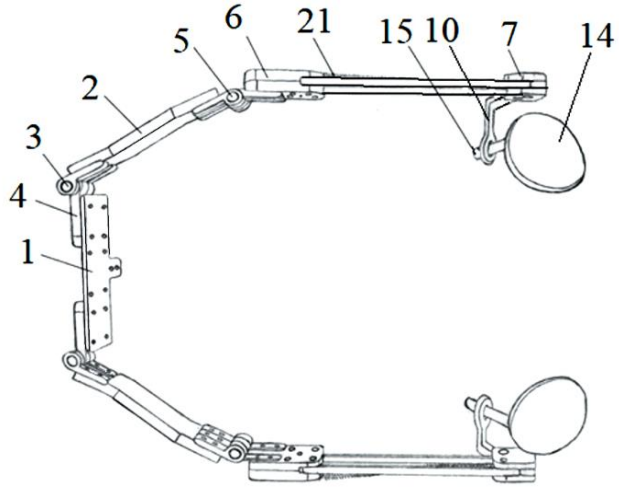

b

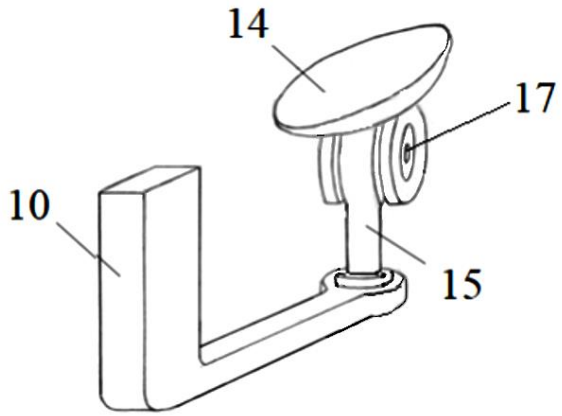

c

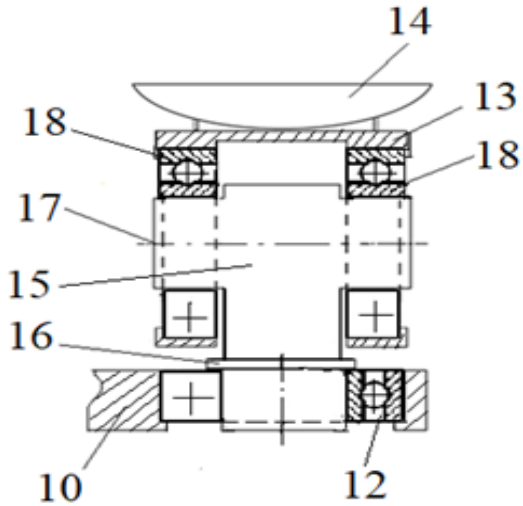

d

Figure 7 (a, b, c, d). Endosurgeon's exoskeleton diagram.

The supporting-adaptive element (1) is made in the form of a plate with holes for attaching two external frames (mechanical arms) to the carrying jacket worn on a person (a surgeon) (the jacket is not shown in the Figure). The shoulder element (2) is the plate with a Z-shaped section, connected by means of the hinge (3) at one end with the support (4) for attachment to a supporting-adaptation element (1), and the other end is connected through the hinge (5) with the shoulder module. The shoulder module is elongated and consists of the proximal unit (6) connected to the distal unit (7) by removable strips (8 and 9) of the upper and lower ones. Removable strips 8 and 9 allow, when they are selected, to make anatomical adaptation of the shoulder modules of the outer frame to the surgeon's upper extremities. The elbow hinge is made in the form of an L-shaped element (10), one end is rigidly connected to the distal unit (7) by means of screws (11), the free end is connected with a device supporting the surgeon's elbow. The end of the L-shaped element (10) for connection with the device supporting the surgeon's elbow is made with a hole for installing (pressing) the bearing (12). The surgeon's elbow-supporting device is made in the form of a П-shaped supporting arm (13) with an elbow supporting element in the form of a bowl (14), mounted on the stand (15), equipped with the stop (16) in the lower part for fixing relative to the L-shaped element (10) in height. In the upper part, the stand (15) has a horizontally located axis (17) for fastening the inner ring of bearings (18) installed on both sides of the stand (15) with the outer ring of bearings (18) in the windows made in a П-shaped supporting arm (13), to ensure rotation (clockwise and counterclockwise rotation) of the П-shaped supporting arm (13) relative to the stand (15). The bearing (12) provides rotation (clockwise and counterclockwise) of the stand (15) relative to the free end of the L-shaped element (10). On the outer surface of the device on the proximal unit (6) and the distal unit (7) of the shoulder module, hooks (19 and 20) are fixed, intended for fastening elastic elements (21) and made, for example, in the form of an axis with a rim at the end to prevent slipping of elastic elements. Elastic elements (21) are made in the form of rubber rings to compensate for the weight of the shoulder and partially the surgeon's forearm.

When testing the exoskeleton for wear resistance by repeating the cycles of movements with a load on a specially made stand, it was revealed that after performing 10,000 thousand cyclically repeated movements in all planes accessible to the exoskeleton, no signs of structures' wear and destruction were detected, and therefore the experiment was recognized as successful one. The results of the comparative endosurgeon's endurance test are presented in Tables 3-5.

Subjective assessments of the test subjects were used as indicators of endurance, which made it possible to distinguish 3 periods during the experiment (the period of minimal manifestations of lassitude, the period of noticeable manifestations of lassitude, the period of the end of the experiment), the duration of each period was the characteristic of the endosurgeon's endurance.

The period of lassitude minimal manifestations was characterized by initial and weakly expressed sensations characteristic for it, such as lassitude in the posterior cervical region, slight heaviness in the shoulder girdle muscles, tremors in the hands, a feeling of stiffness in the forearm, slight discomfort in the inner side of the forearm, slight discomfort in the lumbar region, unpleasant sensations in the shoulder girdle.

The period of noticeable lassitude was characterized by sensations characteristic for it, such as discomfort in the bands of elbows; severity affects the muscles of the forearm, mild tremor; discomfort in the lumbar region; discomfort in the posterior cervical region; feeling of lassitude in the shoulder girdle. At the same time, the subject retained the ability to remain in the proposed position; lassitude was noticeable but did not affect the performance efficiency.

The period of the experiment ending was characterized by pronounced manifestations of lassitude, such as a sharp heaviness in the shoulder girdle, severe tremor, pulling pain in the lumbar region, pulling pain in the supra- and subscapularis, sharp pain in the lumbar region, the appearance of pulling pain in the subscapularis, sharp pain in the back cervical region. The severity of lassitude was characterized by an involuntary change in body position, the inability to remain in the proposed position, a noticeable decrease in performance efficiency, the requirement for an immediate experiment ending.

Period	Period duration (M ± m), minutes		Significance of statistical differences
	Without the exoskeleton	In the exoskeleton	
Minimal manifestations of lassitude	6,38±0,44	13,63± 0,8	t = 7.94 Differences are statistically significant p = 0.000000 Number of freedom degrees f = 30 Critical value of Student's t-test = 2.042, with significance level α = 0.05
Noticeable manifestations of lassitude	8,78± 0,60	20,25± 0,95	t = 10.21 Differences are statistically significant p = 0.000000 Number of freedom degrees f = 30 Critical value of Student's t-test = 2.042, with significance level α = 0.05
The experiment ending	11,63± 0,49	25,5± 0,96	t = 12.87 Differences are statistically significant p = 0.000000 Number of freedom degrees f = 30 Critical value of Student's t-test = 2.042, with significance level α = 0.05

Table 3. Test results of comparative endosurgeon's endurance in orthotopic position.

Period	Period duration (M ± m), minutes		Significance of statistical differences
	Without the exoskeleton	In the exoskeleton	
Minimal manifestations of lassitude	6,2 5± 0,48	15,00 ± 1,00	t = 7.89 Differences are statistically significant p = 0.000000 Number of freedom degrees f = 30 Critical value of Student's t-test = 2.042, with significance level α = 0.05
Noticeable manifestations of lassitude	9,75 ± 0,72	19,31 ± 0,91	t = 8.24 Differences are statistically significant p = 0.000000 Number of freedom degrees f = 30 Critical value of Student's t-test = 2.042, with significance level α = 0.05
The experiment ending	11,63 ± 0,65	22,88 ± 0,88	t = 10.28 Differences are statistically significant p = 0.000000 Number of degrees of freedom f = 30 Critical value of Student's t-test = 2.042, with significance level α = 0.05

Table 4. Test results of comparative endosurgeon's endurance with leaning forward.

Period	Period duration (M ± m), minutes		Significance of statistical differences
	Without the exoskeleton	In the exoskeleton	
Minimal manifestations of lassitude	6,63±0,51	16,5±1,07	t = 8.33 Differences are statistically significant p = 0.000000 Number of freedom degrees f = 30 Critical value of Student's t-test = 2.042, with significance level α = 0.05
Noticeable manifestations of lassitude	10,34±0,58	20,31± 0,85	t = 9.69 Differences are statistically significant p = 0.000000 Number of freedom degrees f = 30 Critical value of Student's t-test = 2.042, with significance level α = 0.05
The experiment ending	13,3 ±0,45	25,19 ±0,98	t = 11.03 Differences are statistically significant p = 0.000000 Number of freedom degrees f = 30 Critical value of Student's t-test = 2.042, with significance level α = 0.05

Table 5. Test results of comparative endosurgeon's endurance in the position of hyperextension.

For 1 year, the exoskeleton was tested at the Regional Clinical Hospital in Volgograd (Surgeon V.A. Seikina) and at the Medical research and production association "Clinic DVIZHENIJE" in Volgograd (Surgeon Associate Professor A.O. Soloviev). 39 surgical interventions were performed in the exoskeleton as total. In all cases, exoskeleton did not break down. Surgeons noted at the same time ease in keeping hands in the forced position and lack of discomfort in the back after long-term surgical interventions. It is noteworthy that the exoskeleton use by the surgeon A.O. Solovyov was one of the stages of early rehabilitation after the clavicle fracture on the right and its surgical treatment, due to which the return to professional activity and the reduction of the disability period became possible even with the limitation of the active flexion functions in the shoulder joint and abduction of the right arm (without using the exoskeleton 40 degrees, with using 155 degrees).

The stages of the endosurgeon's endoskeleton using in the operation preparation and performance are shown in Figures 8 -10.

Figure 8. Dressing the endosurgeon's exoskeleton in the preoperative room.

Figure 9. A sterile gown is put on over the exoskeleton.

Figure: 10. An exoskeleton using during the endoscopic surgery.

Discussion

Thus, it was revealed that the surgeon's motion range and his posture during the operation directly depends on the number of factors:

- features of surgical approach,
- the position of the surgeon at the operating table,
- the angle between endosurgical manipulators and the patient's body,
- the ratio of the surgeon's height and the height of the operating table,
- symmetry of the hands position during the operations,
- uniformity of load distribution when resting on the legs.

Indirectly, the endosurgeon position depends on the degree of mastering manual skills and the established stereotype of work.

At the same time, for quite a long time during the working day, the surgeon's spine is seriously affected. So, if the person weighs 80 kg, the head mass is 3 kg, the upper extremities are 14 kg, the body weight is 30 kg. If we assume that at the level of the sacrum, the spine carries 2/3 of the body weight (20 kg), then by summing up we get the pressure of 37 kg, which is almost half of the body weight. This figure does not take into account the spine muscles tonus, which maintain it at rest, being regulated by the extrapyramidal system. With any additional load associated with overweight, prolonged and uncomfortable static positions, holding additional instruments, it becomes clear that the endosurgeons' discs in the lumbar spine and at the level of the sacrum are regularly exposed to forces that exceed their resistance, especially in mature and old age (during the professional skills heyday). Therefore, the discs cannot restore their original thickness even after unloading, leading to a number of musculoskeletal system disorders. The endosurgeons' hands which do not have support during the operation, transmit a prolonged excessive static load on the lumbar and thoracic spine. Therefore, for the endosurgeons' optimal work, the arms and back unloading is required, which can be done by using the developed by us REX-S exoskeleton of the upper extremities.

Conclusions

The developed endosurgeon's exoskeleton REX-S (robotic exoskeleton – surgical):
- is safe for the health of the surgeon and his patient;
- provides the surgeon with the possibility of resting on the elbow and supports the arms in the state of "weightlessness";
- does not limit the surgeon's motion range in the main joints and especially in the joints of the hand;
- supports the back from a straight position, preventing the body from tilting forward, backward, right and left;
- has a light weight - up to 2 kg;
- has strength and durability;
- is independent of power supplies or does not require them;
- does not restrict the surgeon movements in the operating room and does not have a predetermined trajectory of movements;
- has the ability to adapt (adjust) to the endosurgeon's body size;
- has the ability to be sterilized and (or) be under a sterile endosurgeon's gown;
- is affordable for the mass consumer;
- does not affect the operation of electronic and optical endosurgical equipment in the operating room;
- has the ability to replace structural elements of the exoskeleton as they wear out and include additional options (modular principle);
- has a mobile version, placed on the carrying jacket, and, if necessary, stationary, located at the endosurgeon or neurosurgeon's workplace;
- can be combined with the device for the endosurgeon's legs unloading.

The first experience of the REX-S endosurgeon exoskeleton using is completely positive and testifies to the prospects of its wider application.

Acknowledgements

The article was carried out under a grant from the Volgograd State Medical University.

The authors would like to thank the local authorities (Volgograd State Medical University) for their support and contribution to this research.

Declaration of Interest

The authors declare that they have no conflicts of interest with any of the products or companies discussed in this article.

References

1. R. Berguer, D. L. Forkey, W. D. Smith. Ergonomic problems associated with laparoscopic surgery Surgical Endoscopy.1999; 13: 466–468.
2. Marcos C.Pedrosa, Francis A.FarrayeMD, Amandeep K.Shergill, Subhas Banerjee, David Desilets, David L.Diehl, VivekKaul, Richard S.Kwon, PetarMamula, Sarah A. Rodriguez, ShyamVaradarajulu, Louis-Michel Wong Kee Song, William M.Tierney. Minimizing occupational hazards in endoscopy: personal protective equipment, radiation safety, and ergonomics. Gastrointestinal Endoscopy 2010; 72(2): 227-235.
3. Vorobyev A.A., Andryushchenko F.A., Ponomareva (Zasypkina) O.A., Krivonozhkina P.S., Solovyova I.O. The development and clinical testing of the passive exoskeleton of the upper extremities "Exar", Modern medical technologies. STM, 2016; 8(2): 90-97. http://dx.doi.org/10.17691/stm2016.8.2.13
4. Vorobyev A.A., Kurushina O.V., Agarkova O.I. Possibilities of pain treating in patients with peripheral para- and monoparesis of the upper extremities by using the exoskeleton "EXAR". Russian Journal of Pain. 2018; 2(56): 245-246.
5. Alexandr A. Vorobyev, Denis Yu. Dyachenko, Yuliya A. Makedonova, Dmitriy V. Mikhalchenko, Evgeniy V. Fomichev, Karen A. Sargsyan. Mandible Exoskeleton - First Results of Development and Implementation. Journal of International Dental and Medical Research 2020: Pages 400-406 http://www.jidmr.com/journal/
6. Vorobyev A.A., Solovyova I.O., Andryushchenko F.A., Zasypkina O.A., Krivonozhkina P.S. Pozdnyakov A.M. Terminology and classification of exoskeletons. Bulletin of the Volgograd State Medical University 2015; 3(55): 71-78.
7. Vorobyev A.A., Beburishvili A.G., Andryushchenko F.A., Mikhin I.V., Kitaeva A.V. Clinical and anatomical approaches to the endosurgeon's exoskeleton development. Endoscopic surgery 2020; 26(3): 31-36.
8. Vorobyev A.A., Andryushchenko F.A. Endosurgeon's exoskeleton. Patent for invention No. 2687897 dated 16.05.2019.